TVS RESi Clip & Channel

TECHNICAL INFORMATION

TVS ACOUSTICS
NOISE & VIBRATION CONTROL

Description

TVS RESi Clip is a high performing sound reduction system designed to completely isolate walls and ceilings. Attaching the Isolation Clip to ceiling joists, timber and metal studs or masonry simply and easily secures the drywall-furring channel, and decouples the gypsum board from the non-isolated structure. The resulting construction provides a resilient isolation solution for internal walls and ceilings.

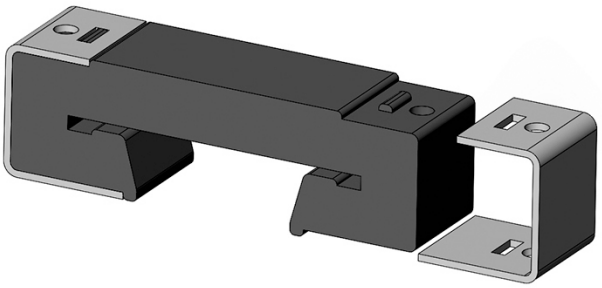

TVS RESi Clip Dimensions

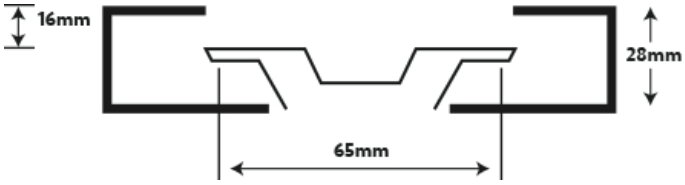

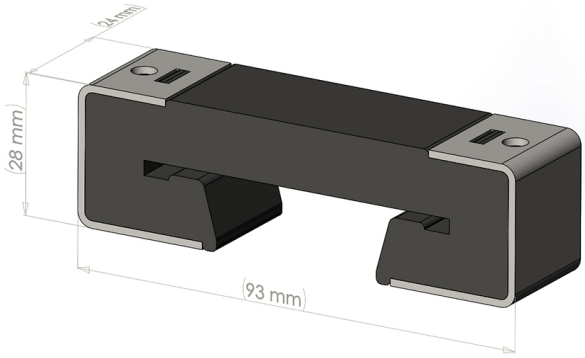

Physical Information

Metal

DC04 (DC04 is the Euro name for the UK CR1 equivalent in steel, which is cold rolled)

Thickness: 2mm

Protection: Dewatering, solvent-based oil, with self-healing capabilities medium-term for protection.

Rubber

Compound:	EPD411	
Hardness:	45 Shore A	Limits: 41-50
Tensile Strength:	Ultimate tensile strength	4.78Mpa
	Elongation @ break	532%
Compression Set:	22 hours @ 70°C	39%

Flame Retardancy: Sample self-extinguished immediately after removing from the Bunsen flame. Moulding Conditions: 15 minutes @ 16°C

Benefits

- Ceiling and Wall Solution
- Low Profile (space saving system)
- Economical, Easy to Install System
- Fail safe metal fixing brackets
- Attaches easily to:
  - Ceiling Joists - Wall Studs - Masonry
- Significant improvement on the use of resilient channel alone (plus ensures the system is not short circuited during installation)
- Offers a robust and higher performing alternative to traditional wall and ceiling isolation methods
- Withstands greater loads than standard systems to provide peace of mind for developers and dwellers
- Weight capacity 30kg maximum per clip, see installation guidelines (other thicknesses of channel are available on request for higher wall and ceiling loads)

T: +44 (0) 1706 260 220 | F: +44 (0) 1706 260 240
E: Sales@TVS-acoustics.com | W: www.TVS-acoustics.com
Low Bay | Commerce Street | Carrs Industrial Estate
Haslingden | Rossendale | Lancashire | BB4 5JT | United Kingdom

TVS GROUP
SPORT | FITNESS | PLAY | ACOUSTICS
www.TVS-Group.co.uk

TVS RESi Clip & Channel

TECHNICAL INFORMATION

TVS ACOUSTICS
NOISE & VIBRATION CONTROL

Technical Data

Wall Construction	Control	Section Performance (Rw)
Timber Stud	15mm Soundbloc; 50 x 100mm Timber Stud Wall; 100mm Knauf Insulation; 15mm Soundbloc	50dB
Timber Stud	15mm Soundbloc; 50 x 100mm Timber Stud Wall; 100mm Knauf Insulation; **TVS RESi Clips** with **TVS RESi Channel**; 15mm Soundbloc	57dB
Timber Stud	15mm Soundbloc; 50 x 100mm Timber Stud Wall; 100mm Knauf Insulation; **TVS RESi Clips** with **TVS RESi Channel**; 2 x 15mm Soundbloc	60dB

Installation of RESi Clips – Walls and Ceilings

Step 1 – Secure clips with a single fastener on one end only.

Wood - Use 60mm coarse thread screws
Steel - Use 42mm self-tapping screws
Concrete or Masonry - Use 60mm anchor

Step 2 – Grip unsecured rubber end, snap in channel. Secure with second screw/anchor.

General Notes

- Spacing of clips on the furring channel shall be a maximum of 1200mm
- Spacing between channels shall be a maximum of 600mm
- Walls only – The first layer of gypsum wallboard shall align seams between sheets on the centerline of the horizontal channels.
- Walls only – The bottom row of clips with channel(s) should be a maximum 75mm to the centre of the channel from the floor. The top row should be within 150mm of the ceiling.
- Ceilings only – The clips should be within 300mm of the ceiling perimeter at the end of the channel run.
- Ceilings only – The first row of channel at the ceiling perimeter should be a maximum 150mm from the wall.
- Channels are installed perpendicular to the framing members.

All potential sound leaks; gaps around outlets, window, doorframes, pipe penetrations and the like should be sealed with a non-hardening acoustical sealant or resilient putty.

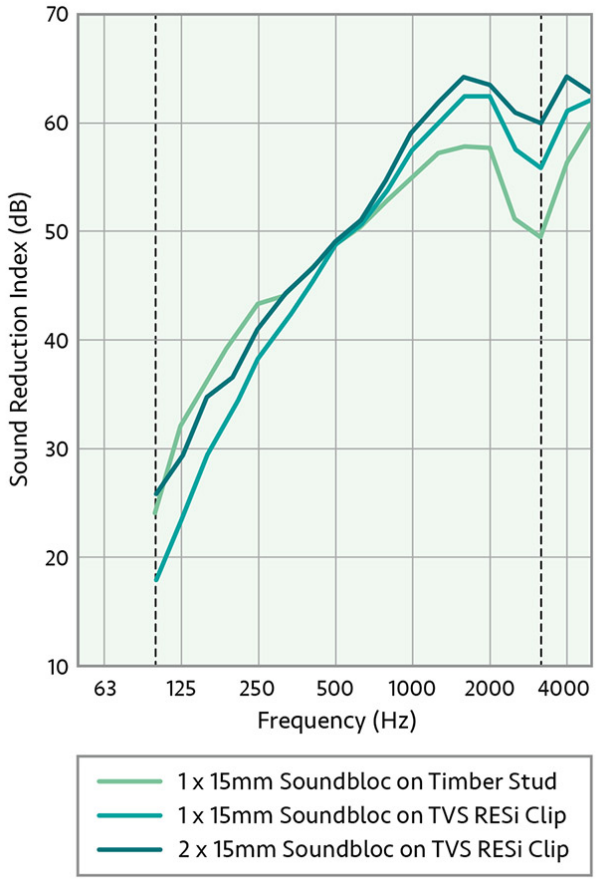

TVS RESi CLIP & CHANNEL
Product Data Sheet PDS 1.1 TVS RESi CLIP & CHANNEL
Revision: 1.3
Issued: 05/07/2019

T: +44 (0) 1706 260 220 | F: +44 (0) 1706 260 240
E: Sales@TVS-acoustics.com | W: www.TVS-acoustics.com
Low Bay | Commerce Street | Carrs Industrial Estate
Haslingden | Rossendale | Lancashire | BB4 5JT | United Kingdom

TVS GROUP
SPORT | FITNESS | PLAY | ACOUSTICS
www.TVS-Group.co.uk